FU

REMOVAL

1. **DISCONNECT BATTERY NEGATIVE TERMINAL**
2. **REMOVE REAR SEAT CUSHION ASSEMBLY RH (See page FU-19)**
3. **REMOVE REAR FLOOR SERVICE HOLE COVER (See page FU-19)**
4. **REMOVE FUEL SUCTION WITH PUMP AND GAUGE TUBE ASSEMBLY (See page FU-19)**
5. **DRAIN FUEL**
6. **REMOVE FRONT EXHAUST PIPE ASSEMBLY**
   (a) Using a clip remover, remove the clip (A).
   (b) Pull off the floor carpet front (B).

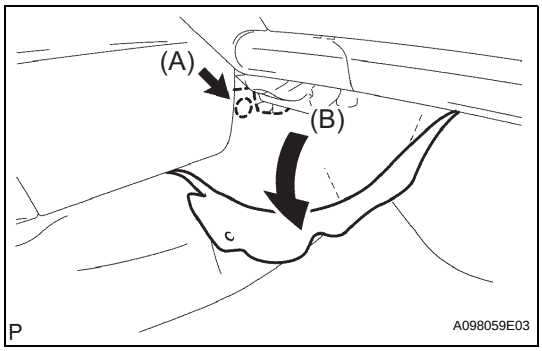

   (c) Disconnect the heated oxygen sensor connector (C).
   (d) Remove the grommet, then pull the connector to the outside of the vehicle (D).

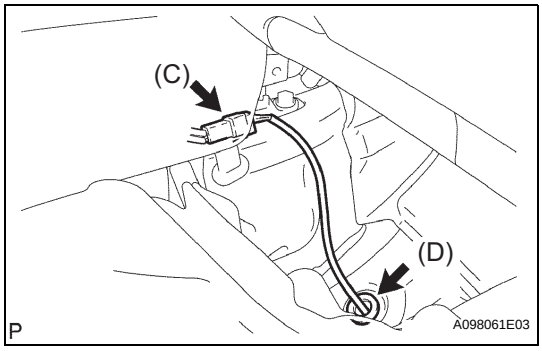

   (e) Remove 2 nuts and the floor panel brace front (E).
   (f) Remove the 4 bolts and 4 compression springs (F).

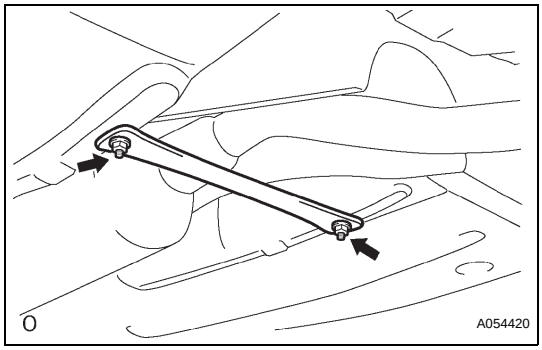

(g) Remove the exhaust pipe front from the 2 exhaust pipe supports No. 4 (G).

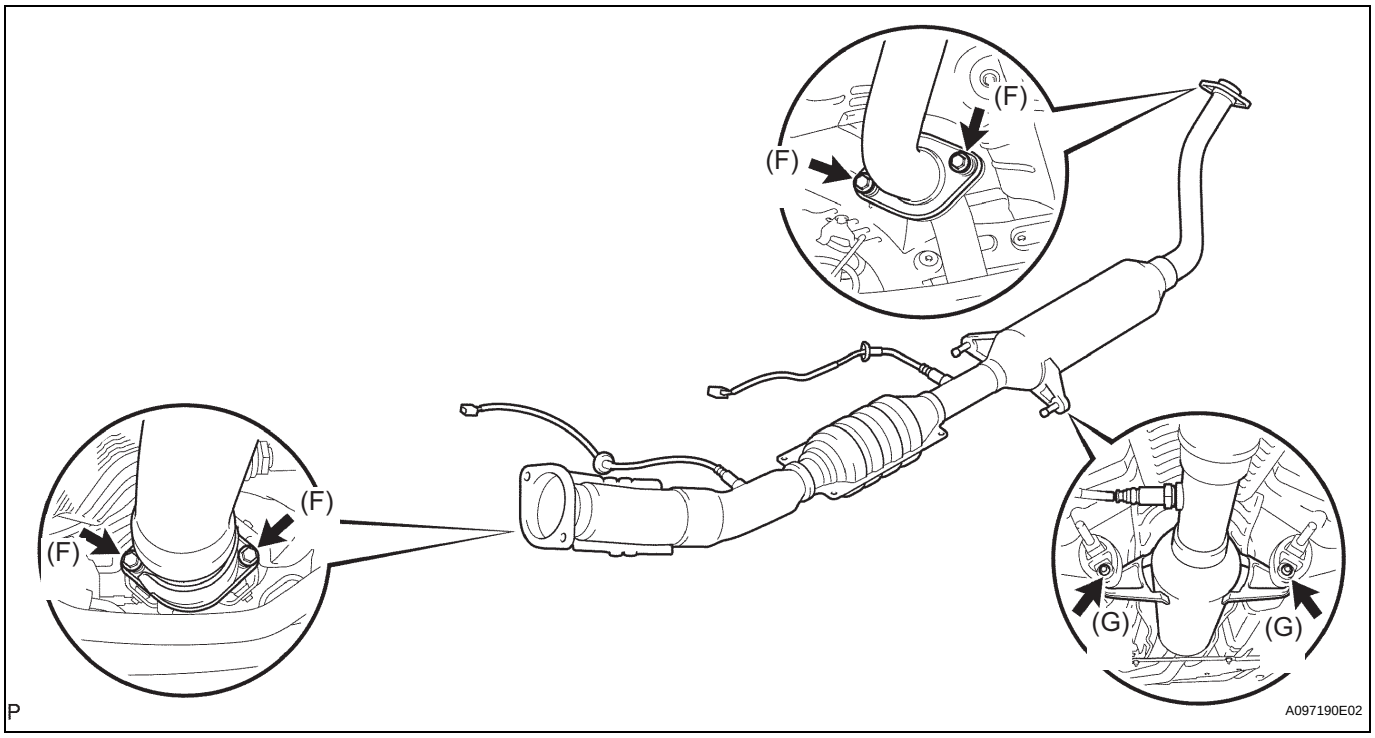

(h) Remove the gasket from the exhaust manifold (H).

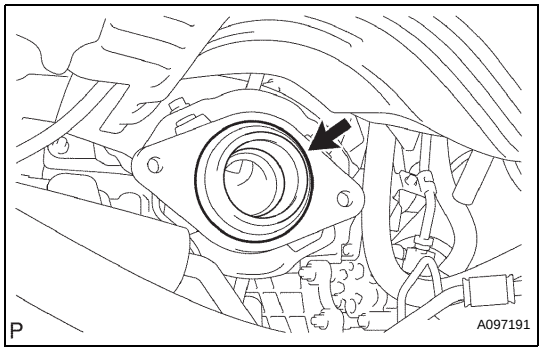

(i) Remove the gasket from the exhaust pipe front (I).

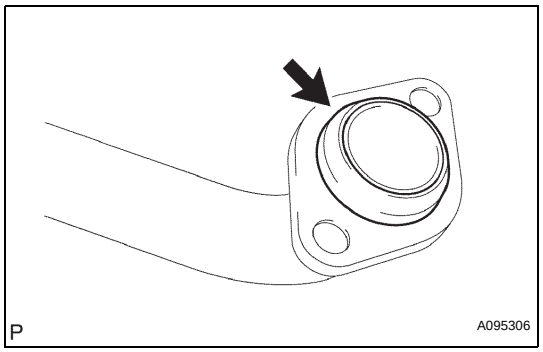

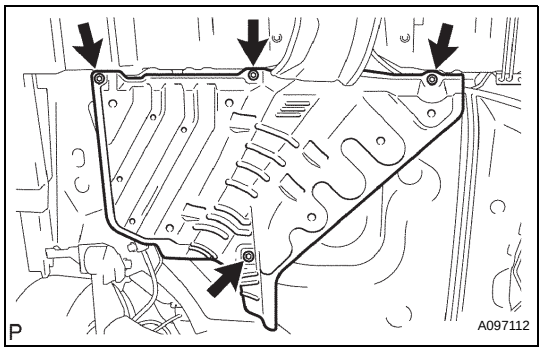

7. REMOVE NO. 1 FUEL TANK PROTECTOR

(a) Remove the 4 bolts, then remove the No. 1 fuel tank protector.

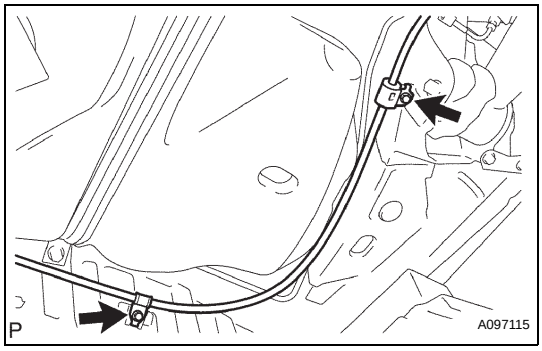

8. DISCONNECT NO. 2 PARKING BRAKE CABLE ASSEMBLY

(a) Remove the 2 bolts, then disconnect the No. 2 parking brake cable.

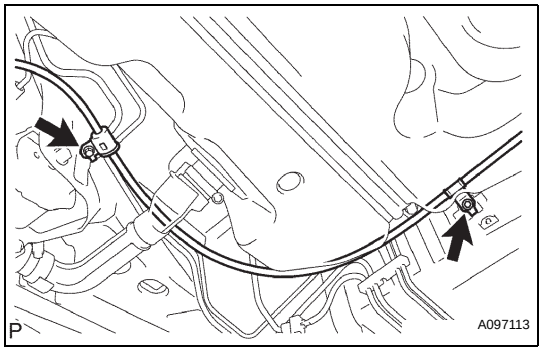

9. DISCONNECT NO. 3 PARKING BRAKE CABLE ASSEMBLY

(a) Remove the 2 bolts, then disconnect the No. 3 parking brake cable.

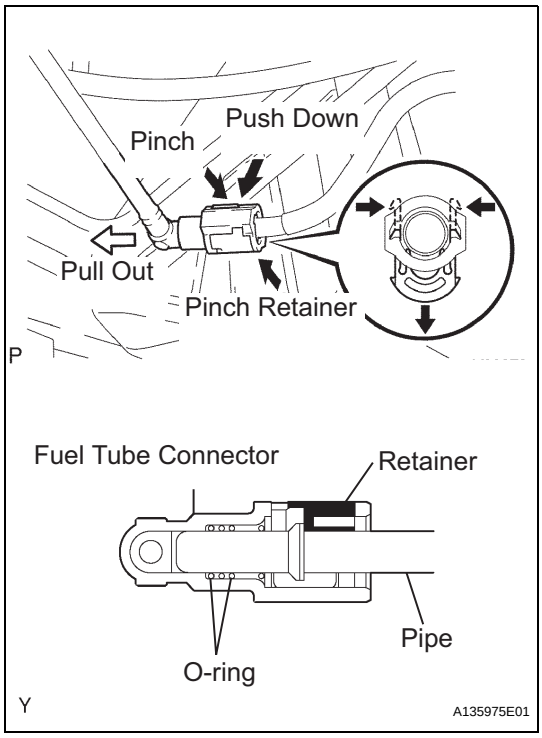

10. REMOVE FUEL TANK ASSEMBLY

(a) Disconnect the fuel tank main tube (A).

(1) Pinch the tabs of the retainer of the fuel tube connector to remove the lock claws and push it down as shown in the illustration.

(2) Pull the fuel tank main tube out of the pipe.

NOTICE:

- **Check that there is no dirt or other foreign objects around the connector before disconnecting it. Clean the connector if necessary.**
- **It is necessary to prevent mud or dirt from entering the connector. If mud or dirt gets in the connector, the O-rings may not seal properly.**
- **Only disconnect the quick connector by hand.**
- **Do not bend, kink or twist the nylon tubes.**
- **Protect the connector by covering it with a plastic bag.**

- **If the pipe and connector are stuck, carefully try wiggling or pushing and pulling on the connector to release it. Pull the connector off the pipe carefully.**

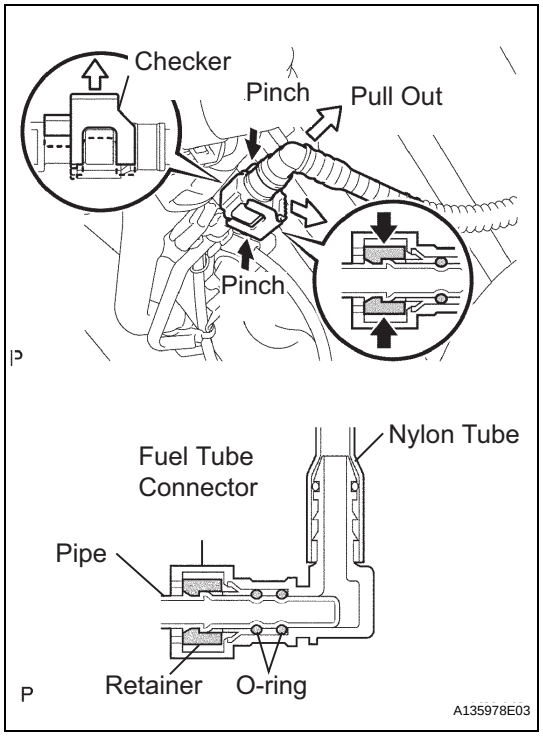

(b) Disconnect the fuel tank breather tube (B).
(1) Remove the checker of the fuel tube connector from the pipe.
(2) Pinch the retainer of the fuel tube connector, then pull the fuel tube connector out of the pipe.
NOTICE:
- **Check that there is no dirt or other foreign objects around the connector before disconnecting it. Clean the connector if necessary.**
- **It is necessary to prevent mud or dirt from entering the connector. If mud or dirt gets in the connector, the O-rings may not seal properly.**
- **Only disconnect the quick connector by hand.**
- **Do not bend, kink or twist the nylon tubes.**
- **Protect the connector by covering it with a plastic bag.**
- **If the pipe and connector are stuck, carefully try wiggling or pushing and pulling on the connector to release it. Pull the connector off the pipe carefully.**

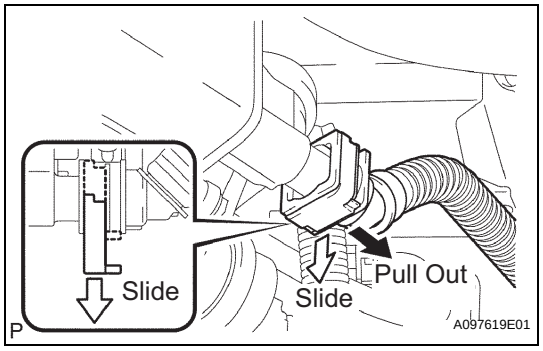

(c) Disconnect the fuel tank vent hose (C).
(1) Pinch the tabs of the retainer of the fuel tube connector to remove the lock claws and slide it as shown in the illustration.
(2) Pull the fuel tank vent hose out of the pipe.
NOTICE:
- **Check that there is no dirt or other foreign objects around the connector before disconnecting it. Clean the connector if necessary.**
- **It is necessary to prevent mud or dirt from entering the connector. If mud or dirt gets in the connector, the O-rings may not seal properly.**
- **Only disconnect the quick connector by hand.**
- **Do not bend, kink or twist the nylon tubes.**
- **Protect the connector by covering it with a plastic bag.**

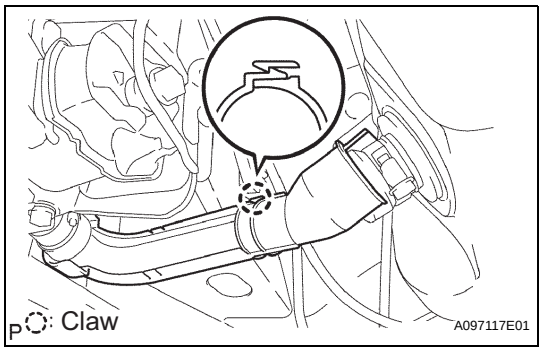

(d) Using a screwdriver, unfasten the claw. Then remove the fuel tank filler pipe cover from the fuel tank filler pipe (D).

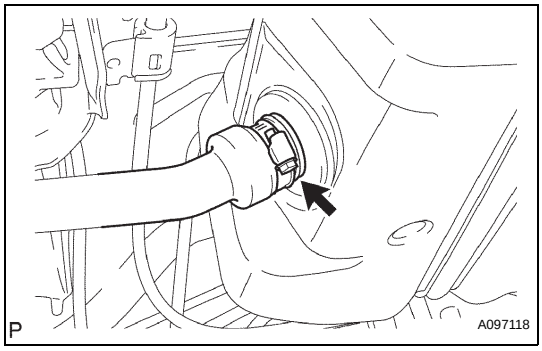

(e) Loosen the hose clamp bolt, then disconnect the fuel tank filler pipe hose from the fuel tank (E).

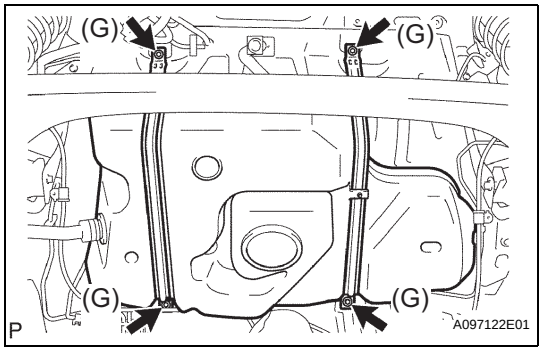

(f) Hold the fuel tank using a transmission jack (F).
(g) Remove the 4 bolts, then remove the 2 fuel tank bands No. 1 (G).
(h) Operate the transmission jack, then remove the fuel tank (H).

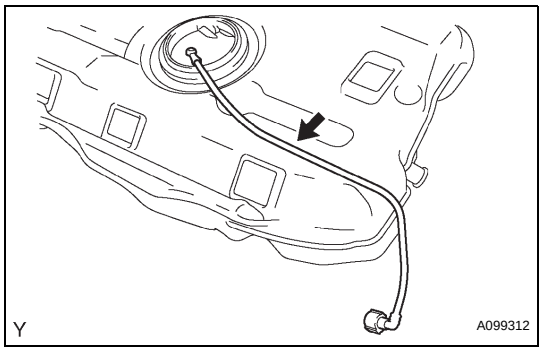

11. REMOVE FUEL TANK MAIN TUBE SUB-ASSEMBLY

(a) Remove the fuel tank main tube from the fuel tank.

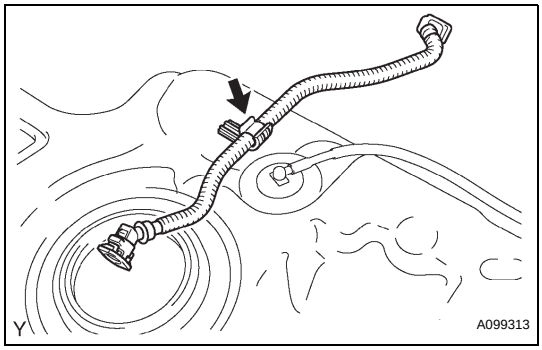

12. REMOVE FUEL TANK VENT HOSE

(a) Remove the fuel tank vent hose from the fuel tank clamp.

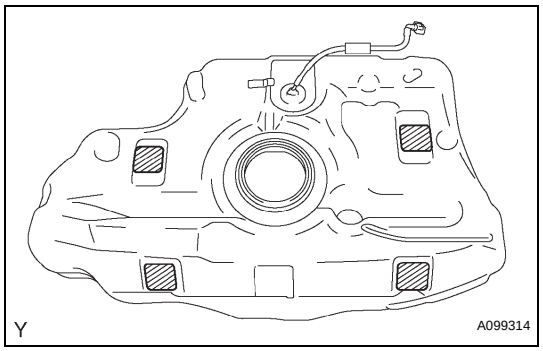

13. REMOVE NO. 1 FUEL TANK CUSHION

(a) Remove the 4 No. 1 fuel tank cushions from the fuel tank.

INSTALLATION

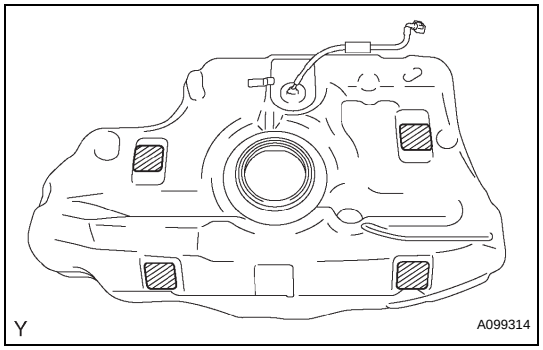

1. INSTALL NO. 1 FUEL TANK CUSHION

(a) Install 4 new No. 1 fuel tank cushions onto the fuel tank.

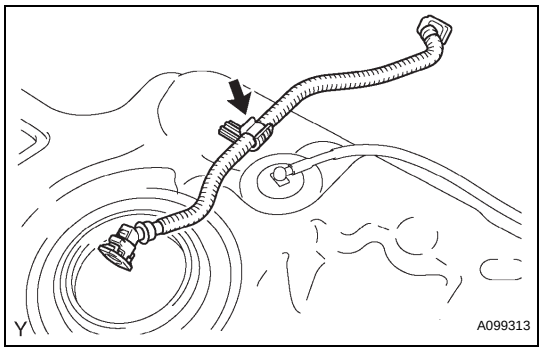

2. INSTALL FUEL TANK VENT HOSE

(a) Install the fuel tank vent hose onto the fuel tube clamp.

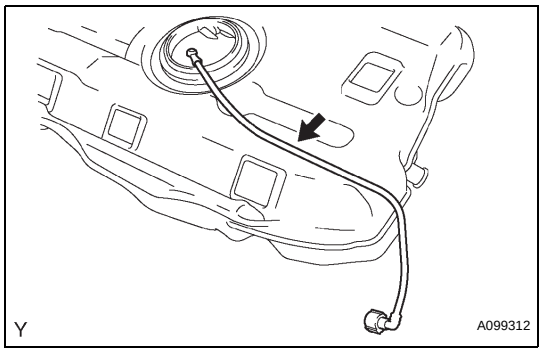

3. INSTALL FUEL TANK MAIN TUBE SUB-ASSEMBLY

(a) Install the fuel tank main tube onto the fuel tank.

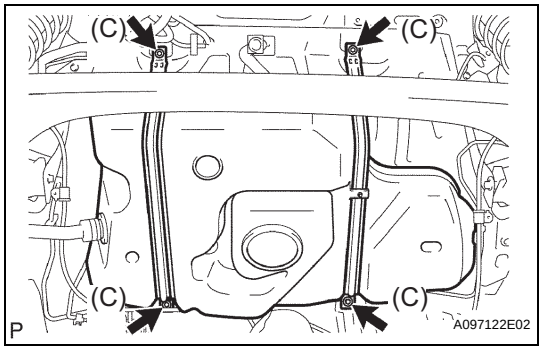

4. INSTALL FUEL TANK ASSEMBLY

(a) Set the fuel tank on a transmission jack (A).

(b) Operate the transmission jack, then install the fuel tank into the vehicle (B).

(c) Install the 2 fuel tank bands No. 1 with the 4 bolts (C).

Torque: 39 N*m (400 kgf*cm, 29 ft.*lbf)

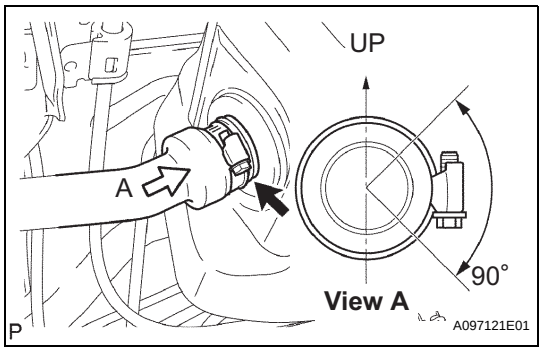

(d) Connect the fuel tank to filler pipe hose to the fuel tank (D).
NOTICE:
Make sure that the hose clamp is facing in the correct direction when installing.

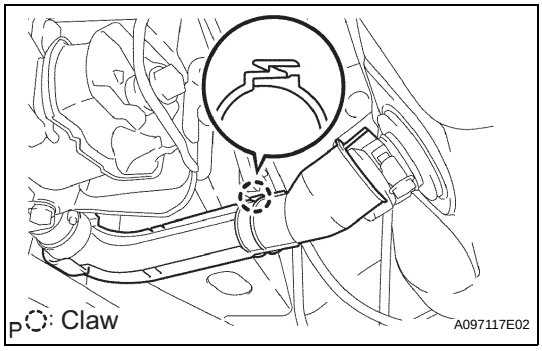

(e) Engage the claw, then install the fuel tank filler pipe cover onto the fuel tank filler pipe (E).

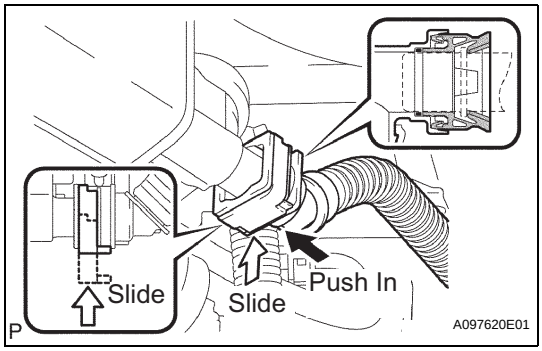

(f) Connect the fuel tank vent hose (F).
(1) Align the fuel tube connector with the pipe, then push the fuel tube connector in until it comes into contact with the seat to connect the fuel tank vent hose to the pipe.
(2) Slide the retainer of the fuel tube connector to lock the claws as shown in the illustration.
NOTICE:
- **Check that there are no scratches or foreign objects around the connected part of the fuel tube connector and pipe before performing this work.**
- **After connecting the fuel tank vent hose, check that the fuel tank vent hose is securely connected by pulling the fuel tube connector.**

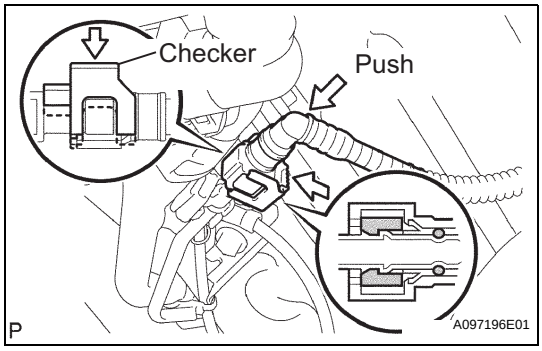

(g) Connect the fuel tank breather tube (G).
(1) Align the fuel tube connector with the pipe, then push the fuel tube connector in until the retainer makes a "click" sound to connect the fuel tank breather tube to the pipe.
NOTICE:
- **Check that there are no scratches or foreign objects around the connected part of the fuel tube connector and pipe before performing this work.**
- **After connecting the fuel tank breather tube, check that the fuel pump tube is securely connected by pulling the fuel tube connector and pipe.**
(2) Install the checker onto the pipe.

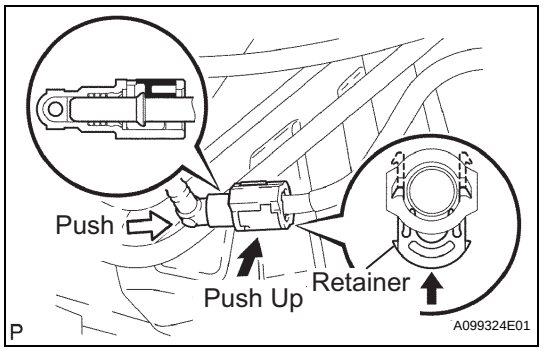

(h) Connect the fuel tank main tube (H).
  (1) Align the fuel tube connector with the pipe, then push the fuel tube connector in until it comes into contact with the seat to connect the fuel tank main tube to the pipe, then push the retainer up until the claws lock.
  NOTICE:
  - **Check that there are no scratches or foreign objects around the connected part of the fuel tube connector and pipe before performing this work.**
  - **After connecting the fuel tank main tube, check that the fuel tank main tube is securely connected by pulling the fuel tube connector and pipe.**

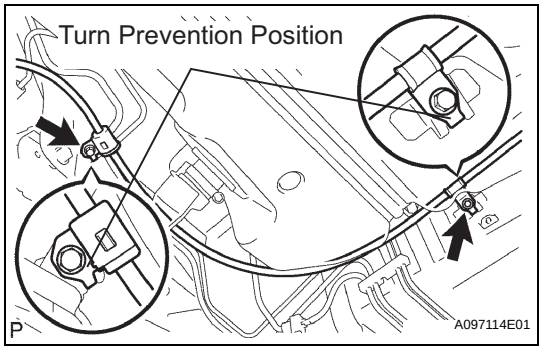

5. CONNECT NO. 3 PARKING BRAKE CABLE ASSEMBLY

(a) Align the turn prevention positions, then connect the No. 3 parking brake cable with the 2 bolts.
Torque: 5.4 N*m (55 kgf*cm, 48 in.*lbf)

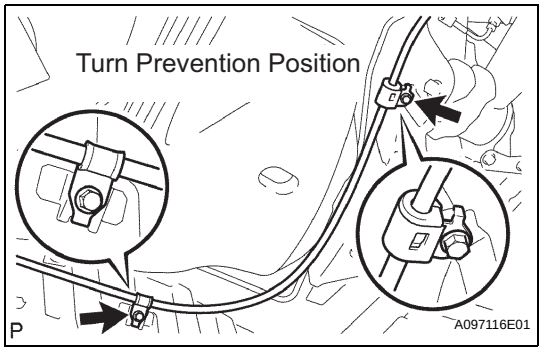

6. CONNECT NO. 2 PARKING BRAKE CABLE ASSEMBLY

(a) Align the turn prevention positions, then connect the No. 2 parking brake cable with the 2 bolts.
Torque: 5.4 N*m (55 kgf*cm, 48 in.*lbf)

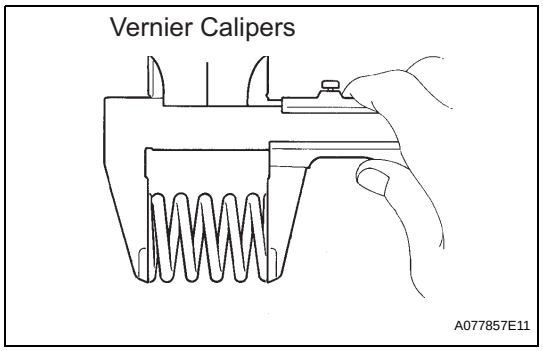

7. INSTALL FRONT EXHAUST PIPE ASSEMBLY

(a) Check the free length (A).
  (1) Using vernier calipers, measure the free length of the compression spring.
  Minimum:
  Exhaust manifold side:
  41.5 mm (1.6339 in.)
  Exhaust pipe tail side:
  38.5 mm (1.5158 in.)
  If the free length is less than the minimum, replace the compression spring.

FU

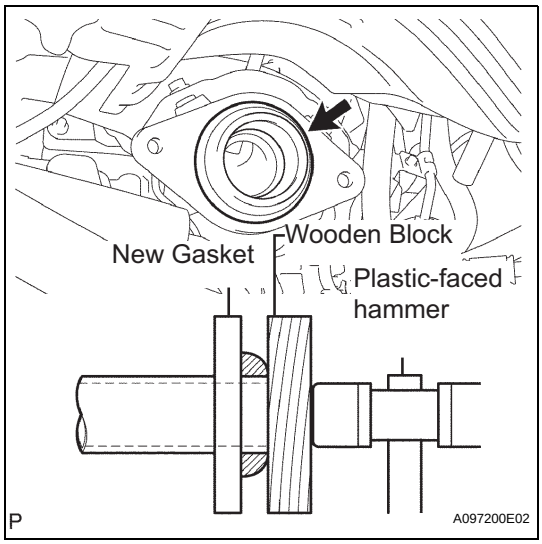

(b) Using a wooden block and plastic-faced hammer, tap a new gasket into the exhaust manifold (B).
NOTICE:
- **Make sure that the gasket is installed in the correct direction.**
- **Do not reuse a removed gasket.**
- **Never push the gasket into the exhaust manifold by installing the exhaust pipe front onto the exhaust manifold.**

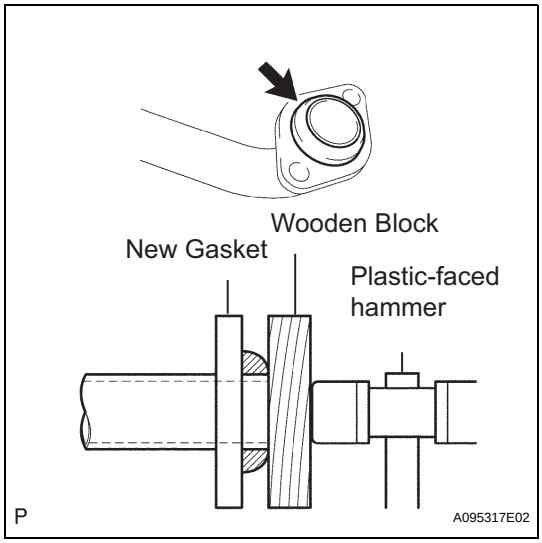

(c) Using a wooden block and plastic-faced hammer, tap a new gasket into the exhaust tail (C).
NOTICE:
- **Make sure that the gasket is installed in the correct direction.**
- **Do not reuse a removed gasket.**
- **Never push the gasket into the exhaust manifold by installing the exhaust pipe front onto the exhaust exhaust tail.**

(d) Install the exhaust pipe front onto the 2 exhaust pipe supports No. 4 (D).

(e) Tighten the 4 compression springs and 4 bolts (E).
Torque: 43 N*m (440 kgf*cm, 32 ft.*lbf)

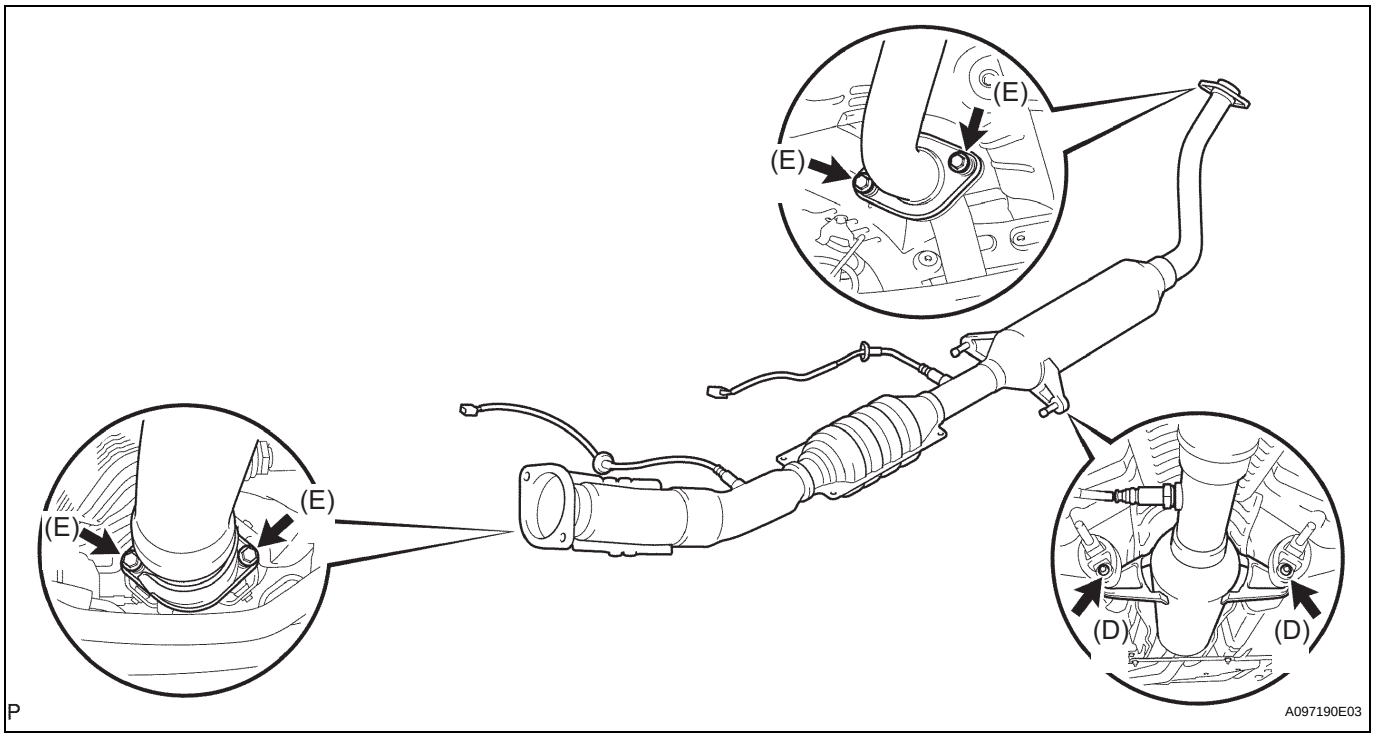

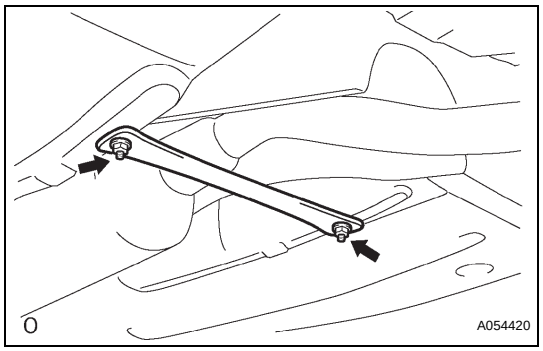

(f) Install the floor panel brace front with the 2 nuts (F).
Torque: 30 N*m (302 kgf*cm, 22 ft.*lbf)

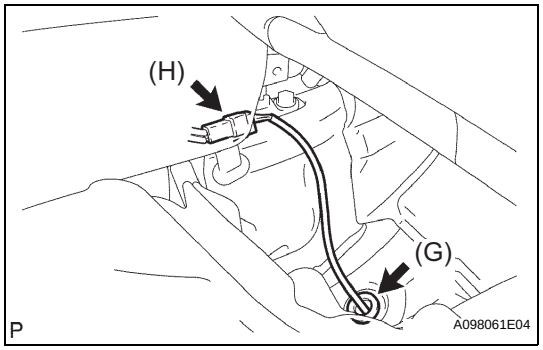

(g) Pull the connector back inside the vehicle, then install the grommet (G).
(h) Connect the heated oxygen sensor connector (H).

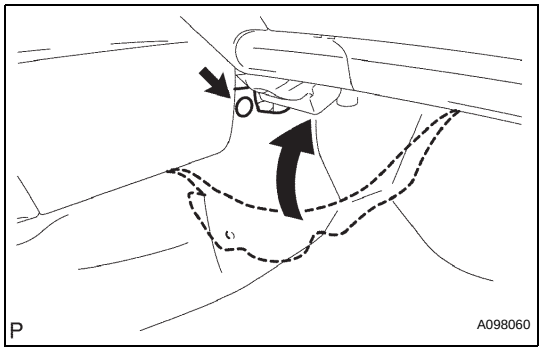

(i) Install the floor carpet front with the clip (I).

8. ADD FUEL

9. INSTALL FUEL SUCTION WITH PUMP AND GAUGE TUBE ASSEMBLY (See page FU-26)

10. CONNECT BATTERY NEGATIVE TERMINAL
Torque: 5.4 N*m (55 kgf*cm, 48 in.*lbf)

11. INSPECT FOR FUEL LEAK (See page FU-28)

12. INSPECT FOR EXHAUST GAS LEAK

13. INSTALL REAR FLOOR SERVICE HOLE COVER (See page FU-28)

14. REMOVE NO. 1 FUEL TANK PROTECTOR
(a) Install the No. 1 fuel tank protector with the 4 bolts.

15. REMOVE REAR SEAT CUSHION ASSEMBLY RH (See page FU-19)

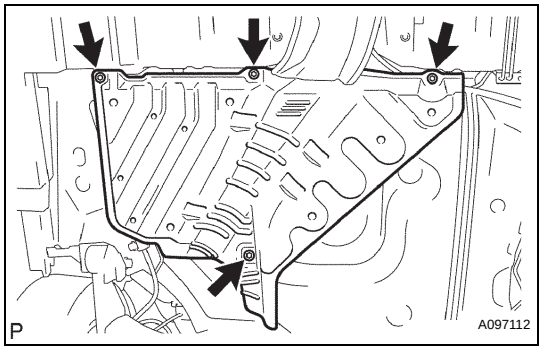

FU